Cambridge International Examinations
Cambridge International General Certificate of Secondary Education

PHYSICS **0625/22**

Paper 2 Multiple Choice (Extended) **February/March 2018**

45 minutes

Additional Materials: Multiple Choice Answer Sheet
Soft clean eraser
Soft pencil (type B or HB recommended)

READ THESE INSTRUCTIONS FIRST

Write in soft pencil.
Do not use staples, paper clips, glue or correction fluid.
Write your name, Centre number and candidate number on the Answer Sheet in the spaces provided unless this has been done for you.
DO **NOT** WRITE IN ANY BARCODES.

There are **forty** questions on this paper. Answer **all** questions. For each question there are four possible answers **A**, **B**, **C** and **D**.
Choose the **one** you consider correct and record your choice in **soft pencil** on the separate Answer Sheet.

Read the instructions on the Answer Sheet very carefully.

Each correct answer will score one mark. A mark will not be deducted for a wrong answer.
Any rough working should be done in this booklet.
Electronic calculators may be used.
Take the weight of 1.0 kg to be 10 N (acceleration of free fall = 10 m / s^2).

The syllabus is approved for use in England, Wales and Northern Ireland as a Cambridge International Level 1/Level 2 Certificate.

This document consists of **15** printed pages and **1** blank page.

IB18 03_0625_22/4RP
© UCLES 2018

CAMBRIDGE International Examinations

[Turn over

www.root19.com +91 - 9969 353 391

1 Which instrument is used to measure accurately the diameter of a thin metal wire?

A 30 cm ruler

B measuring tape

C metre rule

D micrometer screw gauge

2 A parachutist is falling through the air at terminal velocity.

Which statement about the parachutist is correct?

A Every force acting on the parachutist is equal to zero and his acceleration is equal to zero.

B Every force acting on the parachutist is equal to zero and his velocity is equal to zero.

C The resultant force acting on the parachutist is equal to zero and his acceleration is equal to zero.

D The resultant force acting on the parachutist is equal to zero and his velocity is equal to zero.

3 The curved line on the graph shows the motion of a car.

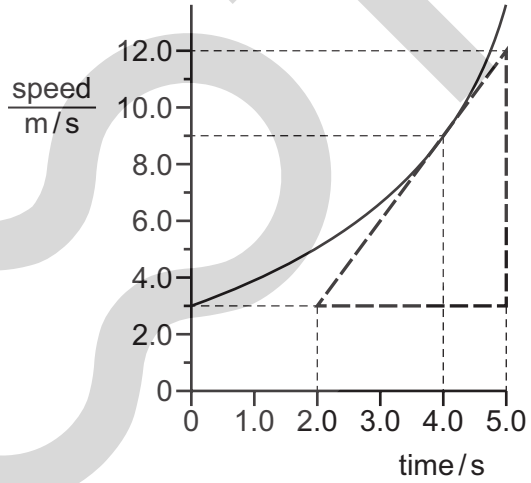

What is the acceleration of the car at the time of 4.0 s?

A $0.33\,m/s^2$ **B** $0.44\,m/s^2$ **C** $2.3\,m/s^2$ **D** $3.0\,m/s^2$

© UCLES 2018
www.root19.com

+91 - 9969 353 391

4 The diagram shows a bird in flight. The bird is flying in a horizontal direction to the right.

In which direction does air resistance act on the bird?

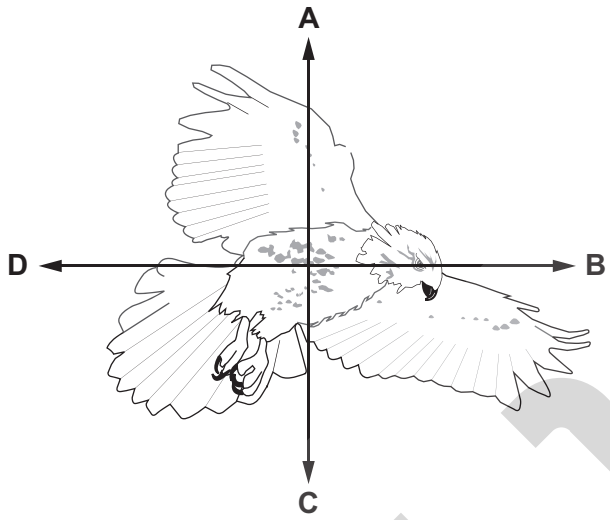

5 The gravitational field strength on the Moon is 1.6 N / kg.

An astronaut has a mass of 75 kg.

What is the weight of the astronaut on the Moon?

A 47 N **B** 75 N **C** 120 N **D** 750 N

6 A measuring cylinder contains 30 cm^3 of a liquid.

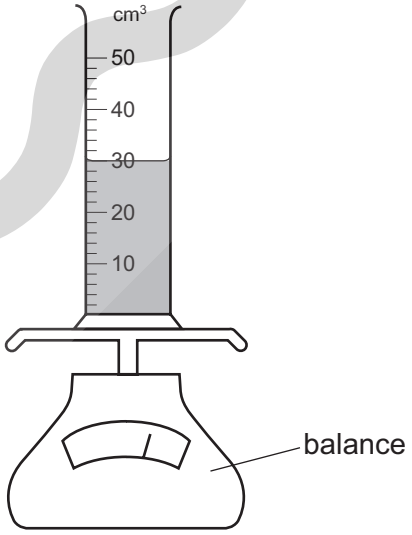

Some more of the liquid is added until the liquid level reaches the 50 cm^3 mark.

The reading on the balance increases by 30 g.

What is the density of the liquid?

A 0.60 g / cm^3 **B** 0.67 g / cm^3 **C** 1.5 g / cm^3 **D** 1.7 g / cm^3

www.root19.com +91 - 9969 353 591

7 A stone of mass 0.12 kg is fired from a catapult. The velocity of the stone changes from 0 to 5.0 m / s in 0.60 s.

What is the average resultant force acting on the stone while it is being fired?

A 1.0 N **B** 2.5 N **C** 3.6 N **D** 8.3 N

8 A uniform rod XY of weight 2.0 N has a length of 80 cm.

The rod is suspended by a thread 20 cm from end X. A weight of 5.0 N is suspended from end X.

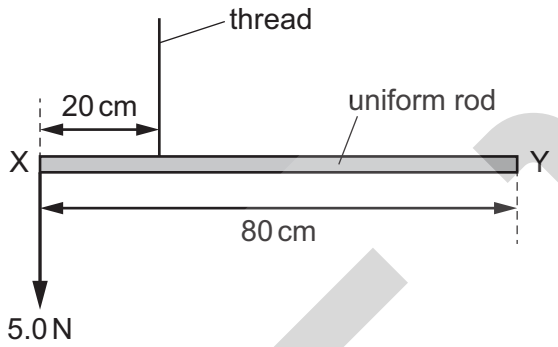

A student hangs a 6.0 N weight on the rod so that it is in equilibrium.

What is the distance of the 6.0 N weight from end X?

A 6 cm **B** 10 cm **C** 26 cm **D** 30 cm

9 A wooden plank rests in equilibrium on two rocks on opposite sides of a narrow stream.

Three forces *P*, *Q* and *R* act on the plank.

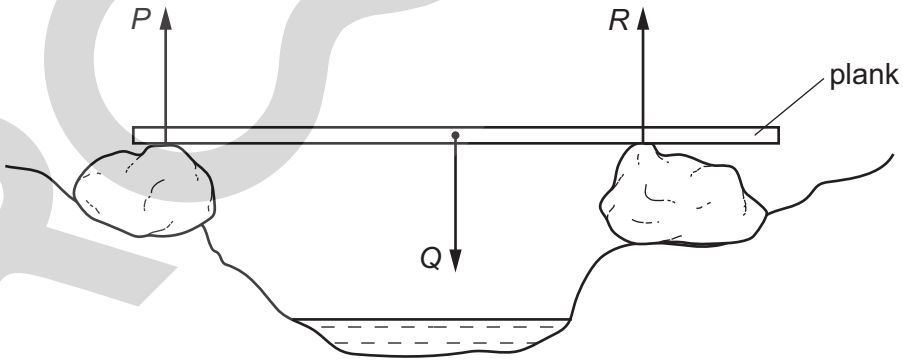

How are the sizes of the forces related?

A $P + Q = R$

B $P + R = Q$

C $P = Q = R$

D $P = Q + R$

www.root19.com +91 - 9969 353 391

10 A ball of mass 0.16 kg is moving forwards at a speed of 0.50 m / s. A second ball of mass 0.10 kg is stationary. The first ball strikes the second ball. The second ball moves forwards at a speed of 0.50 m / s.

What is the speed of the first ball after the collision?

A 0.0 m / s **B** 0.19 m / s **C** 0.31 m / s **D** 0.50 m / s

11 A ball is at rest at the top of a hill. It rolls down the hill. At the bottom of the hill the ball hits a wall and stops.

Which energy changes occur?

A gravitational potential energy → internal energy → kinetic energy

B gravitational potential energy → kinetic energy → internal energy

C kinetic energy → gravitational potential energy → internal energy

D kinetic energy → internal energy → gravitational potential energy

12 A student cycles along a level road at a speed of 5.0 m / s.

The total mass of the student and bicycle is 120 kg.

The student applies the brakes and stops. The braking distance is 10 m.

What is the average braking force?

A 150 N **B** 300 N **C** 15 000 N **D** 30 000 N

© UCLES 2018
www.root19.com

+91 - 9969 353 591

13 A water manometer is connected to a gas supply.

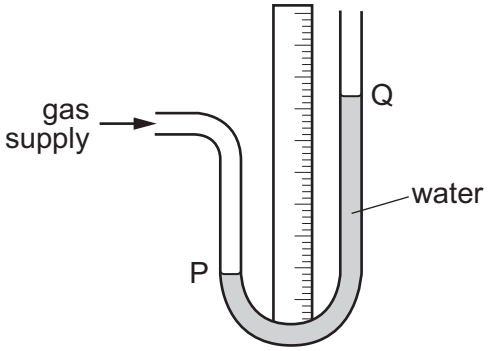

There is a gas leak and the pressure of the gas supply falls.

What happens to the water level at P and what happens to the water level at Q?

	water level at P	water level at Q
A	falls	falls
B	falls	rises
C	rises	falls
D	rises	rises

14 A submarine is 20 m below the surface of the sea. The pressure due to the water at this depth is *P*.

On another day, the submarine is 26 m below the surface of fresh water.

The density of sea water is 1.3 times the density of fresh water.

What is the pressure due to the fresh water at a depth of 26 m?

A $\frac{P}{1.3}$ **B** P **C** $1.3P$ **D** $1.7P$

www.root19.com +91 - 9969 353 391

15 A cylinder with a tap contains a fixed mass of gas X. The gas is contained by a piston which can move freely towards or away from the tap.

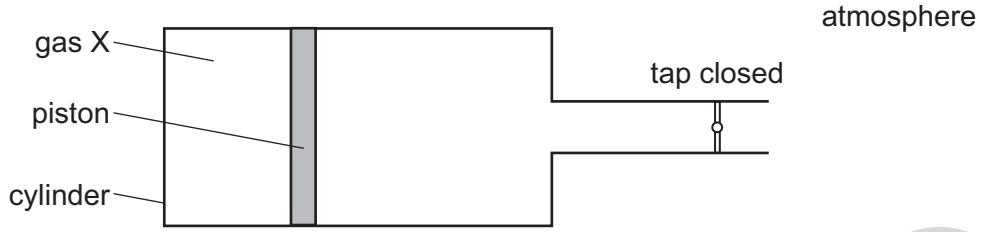

When the tap is opened, the piston moves slightly to the right, towards the tap.

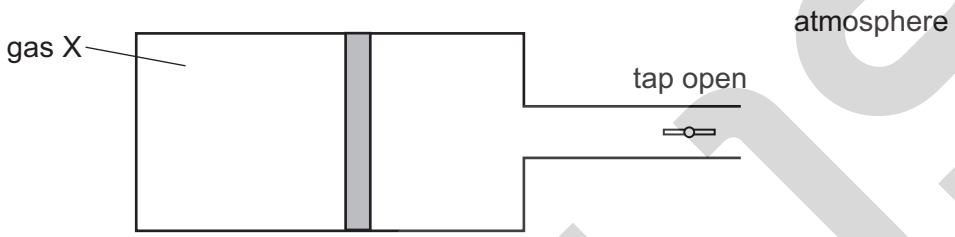

What can be deduced about the pressure of gas X?

	before opening tap	after opening tap
A	less than atmospheric pressure	more than atmospheric pressure
B	same as atmospheric pressure	more than atmospheric pressure
C	more than atmospheric pressure	less than atmospheric pressure
D	more than atmospheric pressure	same as atmospheric pressure

16 Liquid evaporates from a beaker.

What happens to the temperature of the remaining liquid and how does this temperature change affect the rate of evaporation?

	temperature	rate of evaporation
A	decreases	decreases
B	decreases	increases
C	increases	decreases
D	increases	increases

© UCLES 2018
www.root19.com

+91 - 9969 353 591

17 Which quantity does **not** change when there is an increase in temperature?

A the density of a steel block

B the diameter of the hole in a metal nut

C the length of an iron rod

D the mass of a metal coin

18 A thermocouple is used to measure temperature.

Which is an advantage of using a thermocouple instead of a liquid-in-glass thermometer?

A It can measure temperature in the range –10 °C to 110 °C.

B It can measure temperature that changes rapidly.

C It has a linear scale.

D It is more sensitive.

19 A block of copper has a mass of 2.0 kg.

The block of copper absorbs 12 000 J thermal energy.

The specific heat capacity of copper is 385 J / (kg °C).

What is the temperature rise of the copper?

A 15.6 °C **B** 31.2 °C **C** 46.8 °C **D** 62.4 °C

© UCLES 2018
www.root19.com

+91 - 9969 353 391

20 A teacher demonstrates an experiment to a class. A boiling tube is filled with water and some ice cubes are trapped at the bottom of the tube. The teacher then heats the boiling tube in the position shown until the water at the top boils.

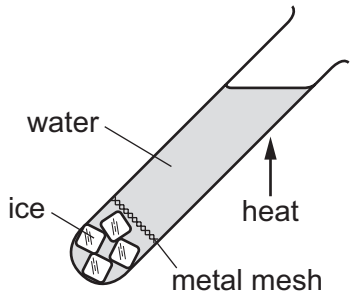

The ice does not melt.

What does this demonstrate?

A Water is a good conductor of thermal energy.

B Water is a good convector of thermal energy.

C Water is a poor conductor of thermal energy.

D Water is a poor convector of thermal energy.

21 A metal cup has a plastic lining. The cup is filled with hot water and held by a hand.

Which statement about the transfer of thermal energy from the water to the hand is correct?

A In the plastic, no energy is transferred directly between adjacent molecules.

B In the plastic, fast moving molecules interact with free electrons, making the electrons move very quickly.

C In the metal, energy is transferred only by electrons.

D In the metal, energy is transferred by electrons and by vibrations of the lattice.

22 Which row shows an example of a transverse wave and an example of a longitudinal wave?

	transverse	longitudinal
A	light	radio
B	radio	sound
C	sound	water
D	water	light

© UCLES 2018
www.root19.com

+91 - 9969 353 591

23 A wave passes through a gap and diffraction causes the wave to spread out.

Which wave spreads out the most?

A large wavelength through a gap slightly larger than the wavelength

B large wavelength through a gap much smaller than the wavelength

C small wavelength through a gap much larger than the wavelength

D small wavelength through a gap much smaller than the wavelength

24 An object is placed before a plane mirror as shown.

A student views the image of the object in the mirror from point P.

Where does she see the image?

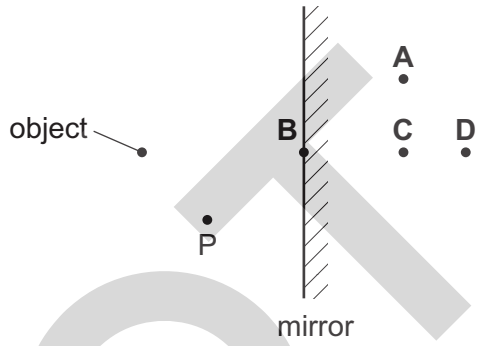

25 Light has a speed of 1.24×10^8 m / s in diamond.

What is the refractive index of diamond?

A 0.41 **B** 1.54 **C** 2.42 **D** 3.72

26 Which statement describes monochromatic light?

A light that does not diffract

B light that has a single frequency

C light that spreads out when shone through a glass prism

D light that travels at the same speed in all materials

© UCLES 2018
www.root19.com

+91 - 9969 353 391

27 Both the amplitude and the frequency of a sound wave decrease.

What happens to the sound heard?

A The sound is louder and has a higher pitch.

B The sound is louder and has a lower pitch.

C The sound is quieter and has a higher pitch.

D The sound is quieter and has a lower pitch.

28 A sound wave is travelling through water.

What is a possible speed for the wave?

A 150 m / s **B** 300 m / s **C** 1500 m / s **D** 5000 m / s

29 An electromagnet is used to remove a splinter from an eye.

What material is the splinter made from?

A aluminium

B glass

C iron

D wood

30 A metal conductor is connected to a battery.

Which statement describes the current in the metal conductor?

A It is a flow of electrons from the negative to the positive terminal.

B It is a flow of electrons from the positive to the negative terminal.

C It is a flow of protons from the negative to the positive terminal.

D It is a flow of protons from the positive to the negative terminal.

31 In an electric circuit, 40 C of electric charge pass a point in 5.0 s.

What is the current in the circuit?

A 0.13 A **B** 8.0 A **C** 45 A **D** 200 A

32 There is a current of 5.0 A in a resistor.

The potential difference (p.d.) across the resistor is 24 V.

How much energy is transferred in the resistor in 1.0 minute?

A 5.0 J **B** 120 J **C** 290 J **D** 7200 J

www.root19.com +91 - 9969 353 591

33 The diagram shows a circuit.

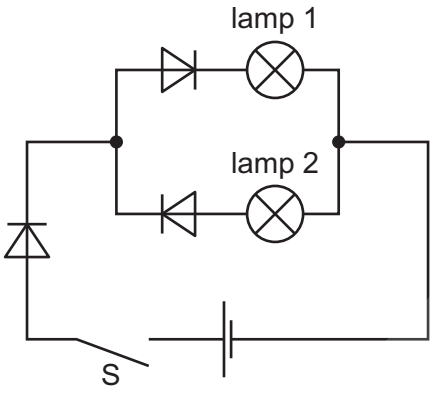

Switch S is closed.

Which lamps light?

A lamp 1 only

B lamp 2 only

C lamp 1 and lamp 2

D neither lamp 1 nor lamp 2

34 A circuit contains four ammeters and three resistors with different values.

Which ammeter shows the largest reading?

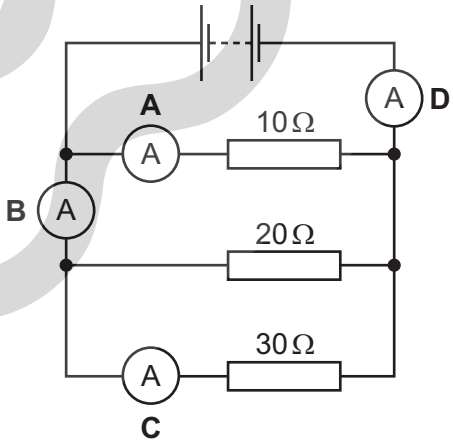

www.root19.com +91 - 9969 353 391

35 The diagrams show pairs of circuits containing logic gates.

In which diagram does the lower circuit of the pair **not** behave in the same way as the upper circuit?

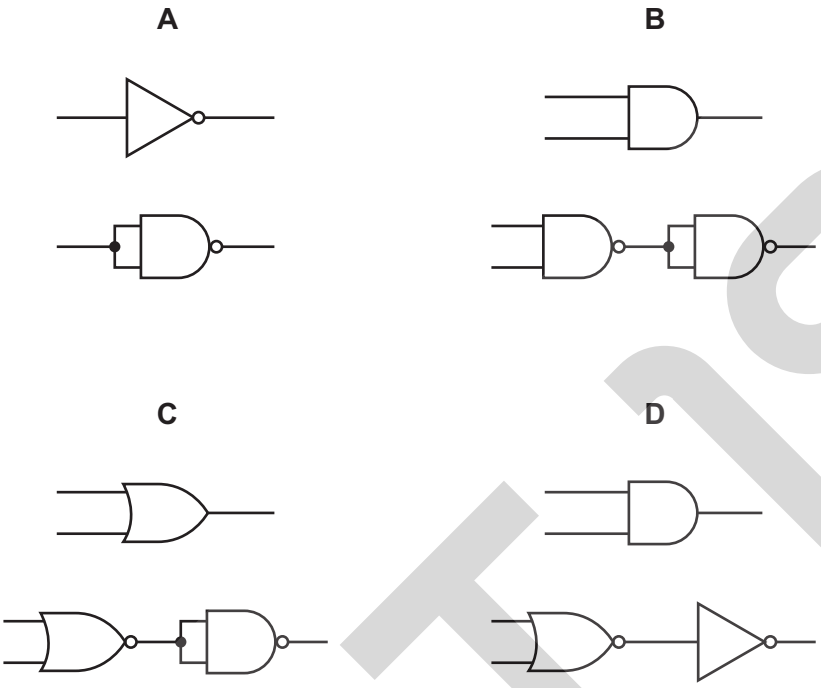

36 The current in a coil produces a magnetic field around it, as shown.

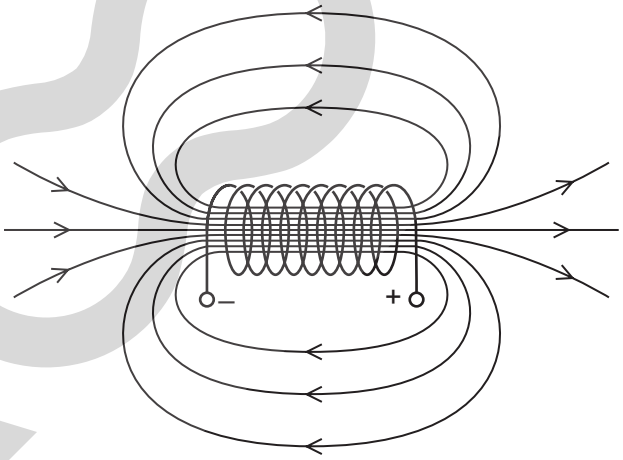

The magnitude of the potential difference across the coil is increased and its direction is reversed.

What happens to the magnetic field?

A The lines become closer together and the right-hand end becomes a south pole.

B The lines become closer together and the right-hand end remains a north pole.

C The lines become further apart and the right-hand end becomes a south pole.

D The lines become further apart and the right-hand end remains a north pole.

www.root19.com +91 - 9969 353 591

37 The notation for an isotope of sodium is $^{23}_{11}Na$.

Which row gives the composition of a neutral atom of this isotope of sodium?

	number of protons	number of neutrons	number of electrons
A	11	12	11
B	11	12	12
C	11	23	11
D	12	11	12

38 The radioactive isotope of hydrogen undergoes beta decay to the isotope $^{3}_{2}He$.

What is the nuclide notation for the hydrogen isotope?

A $^{1}_{1}H$ **B** $^{2}_{1}H$ **C** $^{3}_{1}H$ **D** $^{4}_{2}H$

39 When measuring the emissions from a radioactive rock brought into the laboratory, a teacher mentions that background radiation must be taken into account.

What is this background radiation?

A infra-red radiation from warm objects in the laboratory

B infra-red radiation from the Sun

C ionising radiation from the radioactive rock brought into the laboratory

D ionising radiation in the laboratory when the radioactive rock is not present

© UCLES 2018
www.root19.com

+91 - 9969 353 391

40 Solid caesium-137 decays by the emission of a β-particle to form solid barium-137, which emits a γ-ray.

The barium-137 undergoes no further decay. The half-life of caesium-137 is 33 years.

A block of pure caesium-137 has a mass of 2.0 μg.

The diagram shows a radiation detector a distance of 5 cm from the block. The detector registers a count rate of 2000 counts / second.

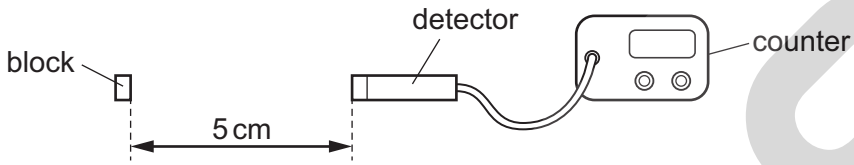

Which statement is **not** correct?

A After 33 years, the mass of the block is 1.0 μg.

B After 66 years, the sample contains 1.5 μg of barium.

C With 5 cm of lead between the block and the detector, the count rate is just above background level.

D With 2 mm of aluminium between the block and the detector, the count rate is reduced significantly.

www.root19.com +91 - 9969 353 391

BLANK PAGE

Permission to reproduce items where third-party owned material protected by copyright is included has been sought and cleared where possible. Every reasonable effort has been made by the publisher (UCLES) to trace copyright holders, but if any items requiring clearance have unwittingly been included, the publisher will be pleased to make amends at the earliest possible opportunity.

To avoid the issue of disclosure of answer-related information to candidates, all copyright acknowledgements are reproduced online in the Cambridge International Examinations Copyright Acknowledgements Booklet. This is produced for each series of examinations and is freely available to download at www.cie.org.uk after the live examination series.

Cambridge International Examinations is part of the Cambridge Assessment Group. Cambridge Assessment is the brand name of University of Cambridge Local Examinations Syndicate (UCLES), which is itself a department of the University of Cambridge.

www.root19.com +91 - 9969 353 391